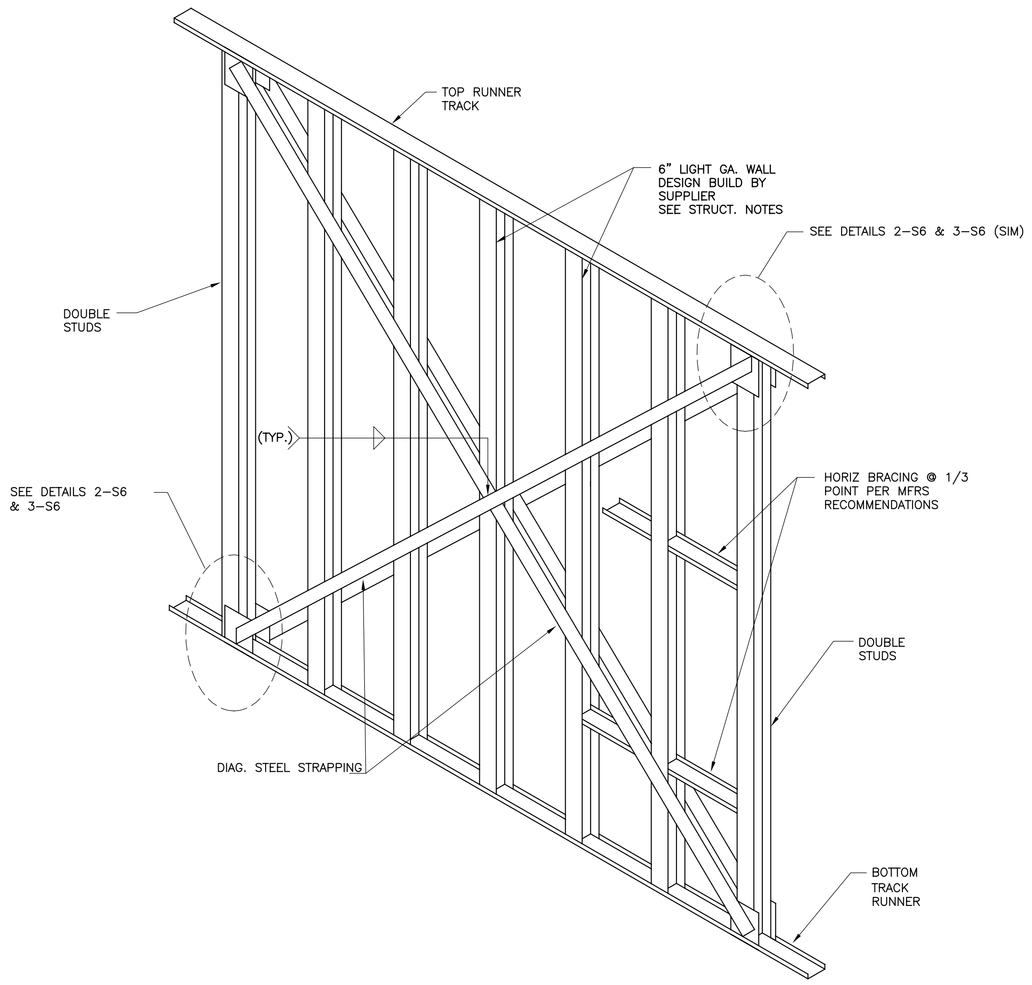

TYPICAL DIAGONAL LIGHT GAGE TENSION STRAPPING

SECTION 1-S6

N.T.S.

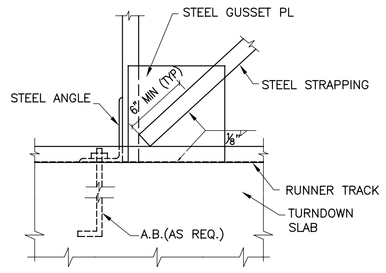

PROPOSED CONNECTION DETAIL

SECTION 2-S6

N.T.S.

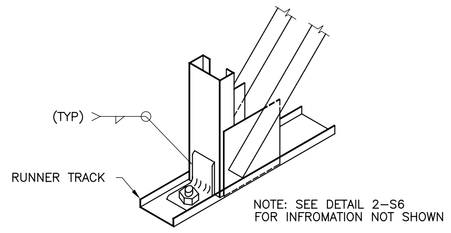

PROPOSED CONNECTION DETAIL

SECTION 3-S6

N.T.S.

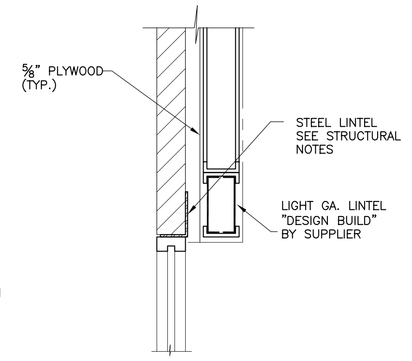

TYPICAL LINTEL DETAIL

SECTION 4-S6

3/4" = 1'-0"

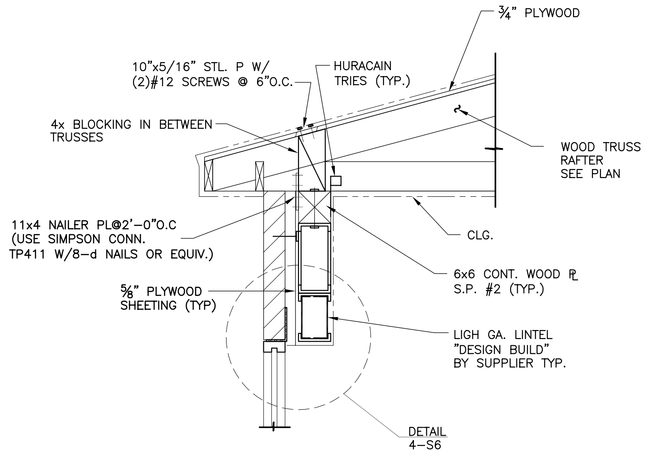

TYPICAL LINTEL DETAIL AT ROOF

SECTION 5-S6

3/4" = 1'-0"

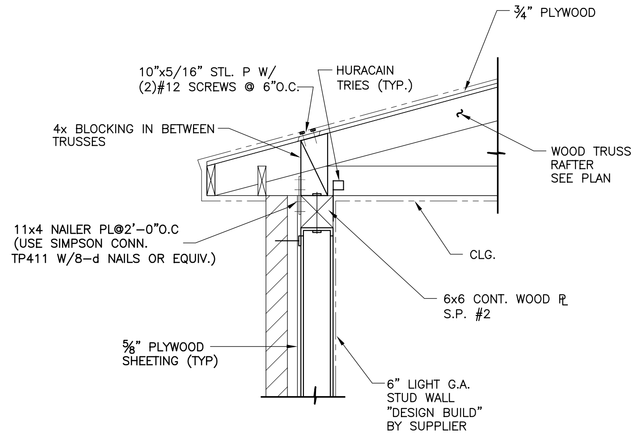

TYPICAL EXT WALL & ROOF TRUSSES DETAIL

SECTION 6-S6

3/4" = 1'-0"

Copyright 2004 Philip Aaron Lacy, Architect All rights reserved. No portion of this document may be reproduced without written permission.

Revisions:

Date:

Consultants:

Tadjer Cohen Edelson Assoc.
CONSULTING STRUCTURAL ENGINEERS
1109 Spring St.
(301) 587-1820
(301) 588-1966
Suite #510
Silver Spring
MD 20910
104043.00

Certification:

Project Title:

BETH SHALOM A.M.E. ZION CHURCH
2501 RITCHIE ROAD
DISTRICT HEIGHTS, MARYLAND 20735

TYPICAL DETAILS

Philip Aaron Lacy, Architects
6188 Oxon Hill Road, Suite 303
Oxon Hill, Maryland 20745
Phone: 301-567-8223

Date: NOV. 21, 2005
Scale: AS NOTED
Drawn:
Checked:
File No.

Drawing No.

S6

of