COPYRIGHT - 2008 - RAMOSMARTINEZ architects, inc.
All ideas, designs and details indicated or represented by this drawing, created and developed for use on this project, are owned by, and are legal property of RamosMartinez Architects, Inc. Use, reproduction, distribution or alteration is prohibited without written authorization from the Architect.

2

KITCHEN AIR BALANCE				
ITEM	EXH. FAN	UNCOND. O.A. CFM	FROM A/C CFM	TOTAL
HOOD EF	−4,200			−4,200
HOOD MAKE UP FAN		3,780		+3,780
BATH ROOM	−300			−300
A/C O/A			200	200
TOTAL	−4,500	+3,780	200	−520*

* THE BUILDING IS ON POSITIVE PRESSURE

3

BUILDING AIR BALANCE			
ITEM	EXH. FAN	FROM A/C CFM	TOTAL
KITCHEN	−520		−520
RTU #4		4,000	+4,000
TOTAL	−520	4,000	+3,480

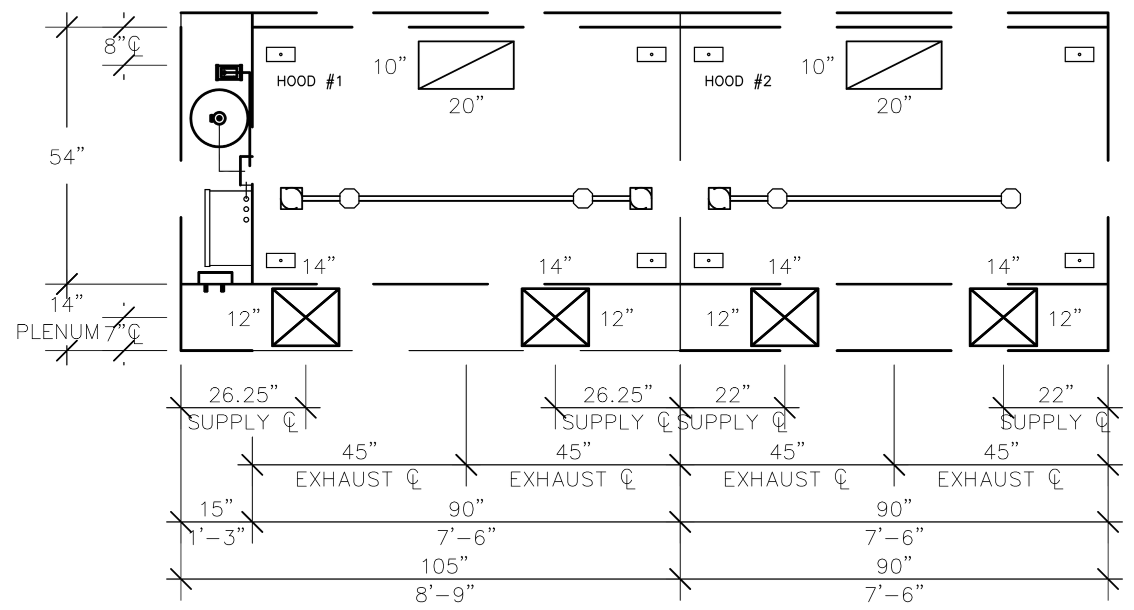

PLAN VIEW

SCALE" 1/2" = 1'-0"

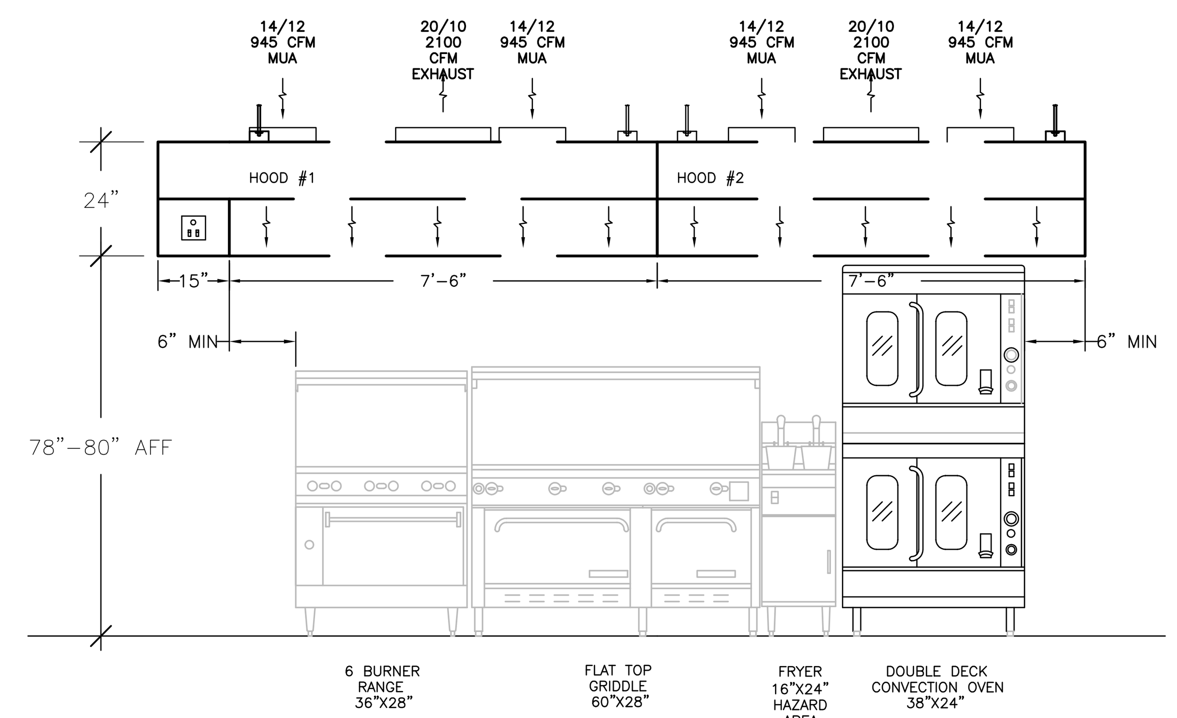

FRONT ELEVATION

SCALE" 1/2" = 1'-0"

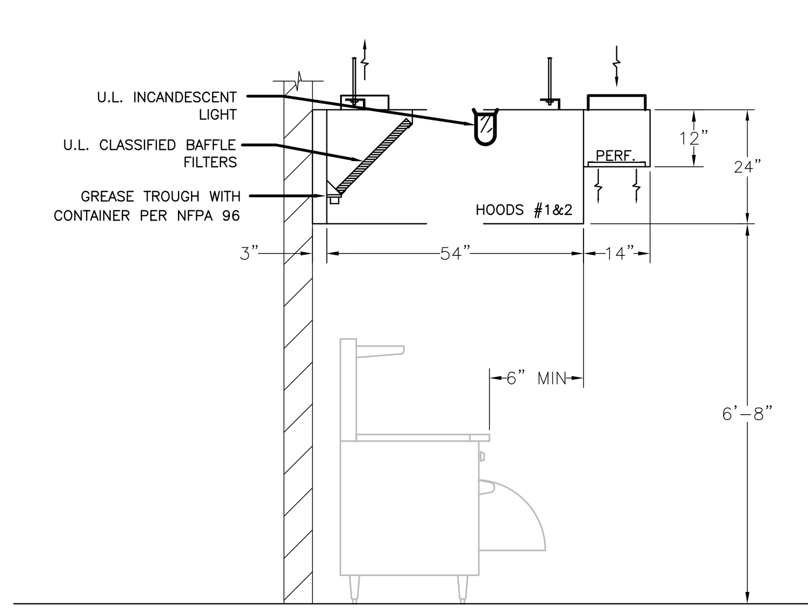

LEFT SIDE ELEVATION

SCALE" 1/2" = 1'-0"

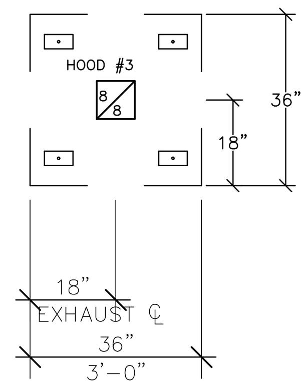

PLAN VIEW

SCALE" 1/2" = 1'-0"

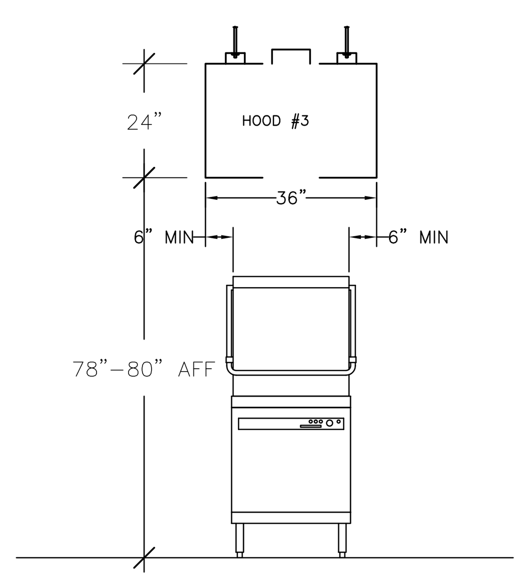

FRONT ELEVATION

SCALE" 1/2" = 1'-0"

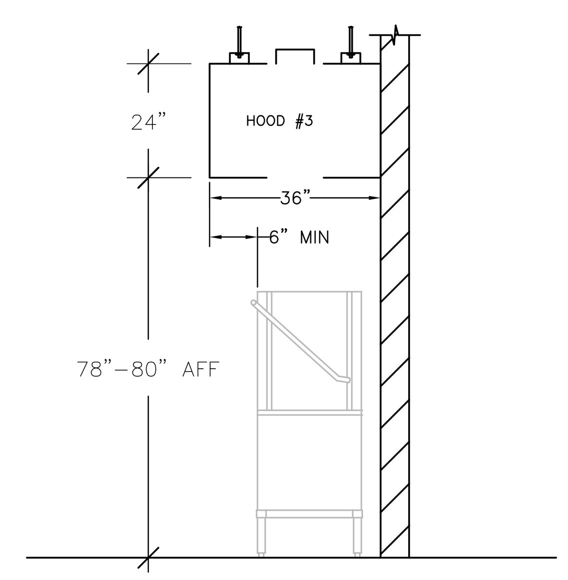

LEFT SIDE ELEVATION

SCALE" 1/2" = 1'-0"

HOODS #1&2

GREASE DUCT VELOCITY SCHEDULE

DUCT AREA = L X W / 144 = SQ.FT.
DUCT VELOCITY = CFM DIVIDED BY DUCT AREA=FPM

DUCT AREA = 10 X 20 / 144= 1.39 SQ.FT.
DUCT VELOCITY = 2100 / 1.39 = 1512 FPM

HOOD SYSTEM SHALL BE UL APPROVED TO BE SUPPLY BY HOOD DEPOT. CONTACT PERSON MICHAEL LUBOWICKI, TEL # 1-954-570-9860, 1-800-322-8730, EMAIL:Mlubowicki@hooddepot.net

GENERAL NOTES:

1. **UL RANGE HOOD:**
MATERIAL: 18 GAUGE STAINLESS STEEL CONSTRUCTION ON EXPOSED SURFACES 18 GA. GALV. ON EXH. PLENUM ALL CONTINUOUS EXTERNAL LIQUID TIGHT WELDS, POLISHED. FILTERS UL CLASSIFIED BAFFLE TYPE. SET IN HOOD @ 45 DEGREE ANGLE, INCANDESCENT LIGHT FIXTURES UL LISTED FOR USE IN COMMERCIAL COOKING HOODS. GREASE TRAY BELOW FILTERS WITH REMOVE-ABLE GREASE CONTAINER, LIQUID VOLUME LESS THAN 1 QUART. ALL IN COMPLIANCE WITH NFPA #96 AND LOCAL BUILDING CODES.

2. **VAPOR HOOD:**
MATERIAL: 18 GAUGE STAINLESS STEEL CONSTRUCTION ALL CONTINUOUS EXTERNAL LIQUID TIGHT WELDS, POLISHED WITH FULL PERIMETER GUTTTER. ALL IN COMPLIANCE WITH NFPA #96 AND LOCAL BUILDING CODES.

3. **COMPLIANCE:**
SYSTEM TO BE MANUFACTURED IN STRICT ACCORDANCE WITH NFPA #96, LOCAL FIRE PREVENTION BUREAU MECH. AND HEALTH DEPT. STANDARDS

3

4. HOOD SYSTEM SHALL BE INSTALLED TO AUTOMATICALLY ACTIVATE THE EXHASUST FAN WHENEVER COOKING OPERATION OCCUR. THE ACTIVATION OF THE EHAUST FAN SHALL OCCUR THEOUGH AN INTERLOCK WITH THE COOKING APPLIANCES BY MEANS OF HEAT SENSORS OR BY MEANS OF OTHER APPROVED METHODS (FBC 507.2.1.1)

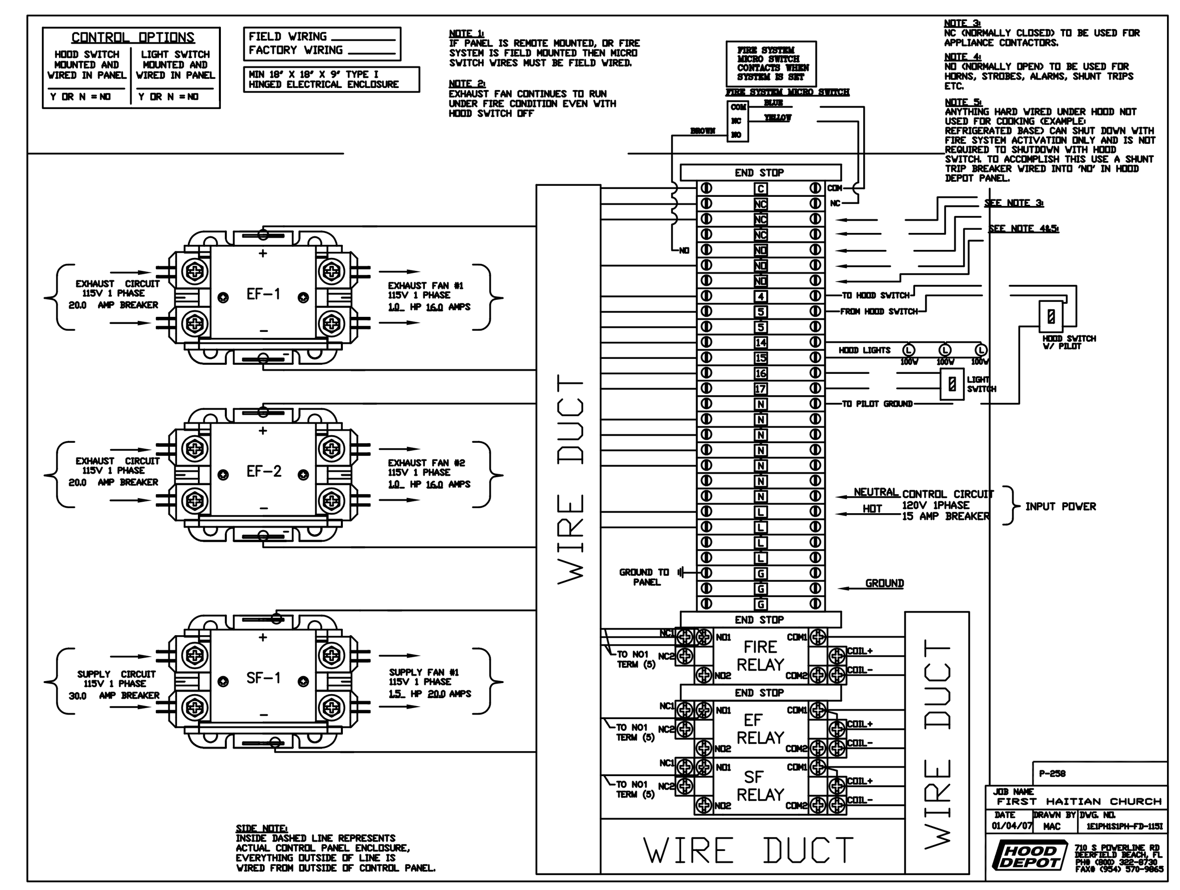

FAN SCHEDULE

HOOD #	FANS	MFG.	MODEL #	CFM	S.P.	HP	VOLTAGE	RPM	AMPS
#1&2	EF-1	BREIDERT	TXB-18	4200	1"	1.5	115/1ø	703	20.0
#3	EF-2	BREIDERT	DB-9	450	1/2"	1/4	115/1ø	1146	5.8
#1&2	SF-1	BREIDERT	KSF-18	3780	1/2"	1.5	115/1ø	577	20.0

HOOD SCHEDULE

HOODS #1&2 — TYPE I HOOD — U.L. FILE MH18803

MFG.	MODEL #	LENGTH	EXHAUST COLLAR SIZE	EXHAUST COLLAR S.P.	EXHAUST COLLAR CFM	SUPPLY COLLAR SIZE	SUPPLY COLLAR S.P.	SUPPLY COLLAR CFM	WGT
HOOD DEPOT	SW	7'-6"	10" x 20"	5/8"	2100	(2) 12" x 14"	1/4"	1890	400

LIGHTS QTY	LIGHTS TYPE	FILTERS QTY	FILTERS TYPE	UTILITY CABINET SIZE	UTILITY CABINET LOCATION	SWITCHES HOOD	SWITCHES LIGHT	S/S
2	INCANDESCENT	(3) 16" X 20" (2) 20" X 20"	ALUM	15"	LEFT	ON FIRE CABINET	ON FIRE CABINET	EXPOSED

HOOD SCHEDULE

HOOD #3 — TYPE II HOOD

MFG.	MODEL #	LENGTH	EXHAUST COLLAR SIZE	EXHAUST COLLAR S.P.	EXHAUST COLLAR CFM	SUPPLY COLLAR SIZE	SUPPLY COLLAR S.P.	SUPPLY COLLAR CFM	WGT
HOOD DEPOT	SW	3'-0"	8" x 8"	1/2"	450	N/A	N/A	N/A	350

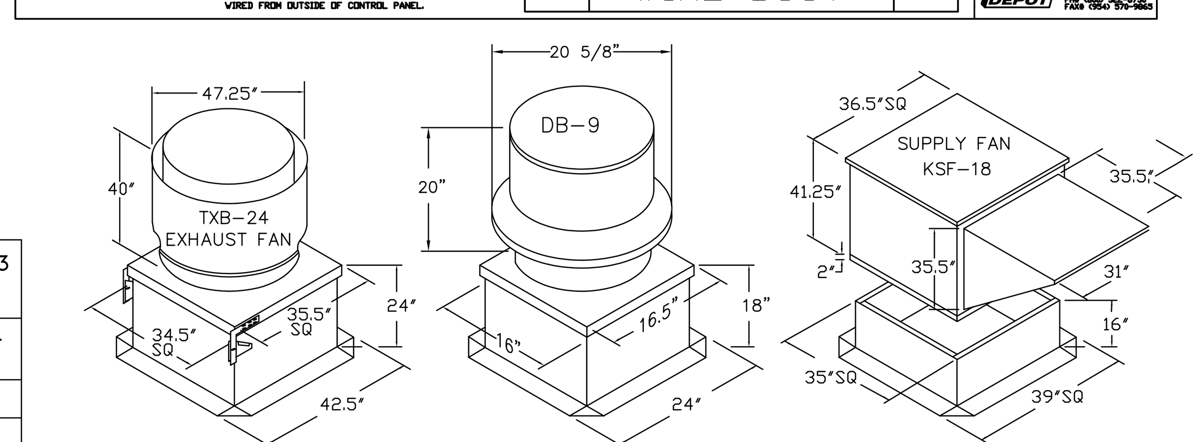

EXHAUST CURB & FAN DETAIL — EXHAUST CURB & FAN DETAIL — SUPPLY CURB & FAN DETAIL

HOOD DEPOT INC.
710 SOUTH POWERLINE ROAD
DEERFIELD BEACH, FL. 33442
E-MAIL: HOODDEPOT@AOL.COM
CHIEF ENGINEER
JOSEPH POTTS, P.E.
PH# 800-322-8730
LICENSE # 22656

REVISIONS		
NUMBER	DESCRIPTION	DATE

L.I.M. DESIGN INC.
4925 COLLINS AVE. #7-D MIAMI BEACH, FL

JOB NAME: FIRST HAITIAN CHURCH — P-258

SCALE: NOTED — DRAWN BY: M.C. — CHECK BY: R.Z. — DATE: 06/10/09

TITLE: MECHANICAL HOOD DRAWING — 1 OF 2

DANIEL F. GUTIERREZ, P.E.
LIC. #049086
7328 SW 82 St B-214
MIAMI FL 33143
PH: (786)499-4167
FAX: (305)667-5262
CELL: 786-499-4167
DESIGN — INSPECTIONS

RAMOSMARTINEZ
ARCHITECTS, INC. AA 26000528
MIAMI
521 N.W. 12th AVENUE
MIAMI, FL 33136
TELEPHONE: 305-548-3006
FACSIMILE: 305-548-3220
WEBSITE: www.rmarq.com
NEW YORK
11 ERIE STREET
JERSEY CITY, NJ 07302

First Haitian Free Curch of Nazarene by Faith

IN
ORLANDO FLORIDA

FIRST HAITIAN FREE CHURCH OF NAZARENE

308 SOUTH
ORANGE BLOSSOM TRAIL
ORLANDO, FLORIDA

REVISIONS:
1 BLDG DEPT COMM 03-26-09
2 BLDG DEPT COMM 08-31-09
3 BLDG DEPT COMM 11-09-09

COMM. NO. 08-103
DATE:
DRAWN BY:
CHECKED BY:

2 1

M-5
5 OF 6