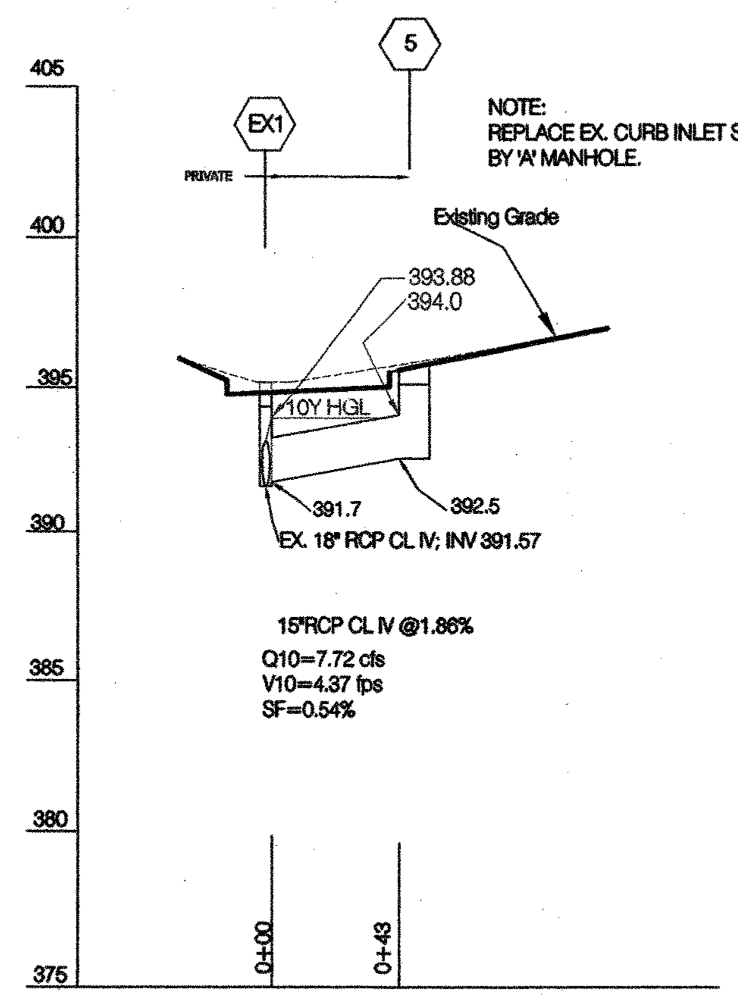

STORM DRAIN PROFILE FROM STR#5 TO STR# EX 1

SCALE: 1" = 5' VERT.
1" = 50' HORIZ.

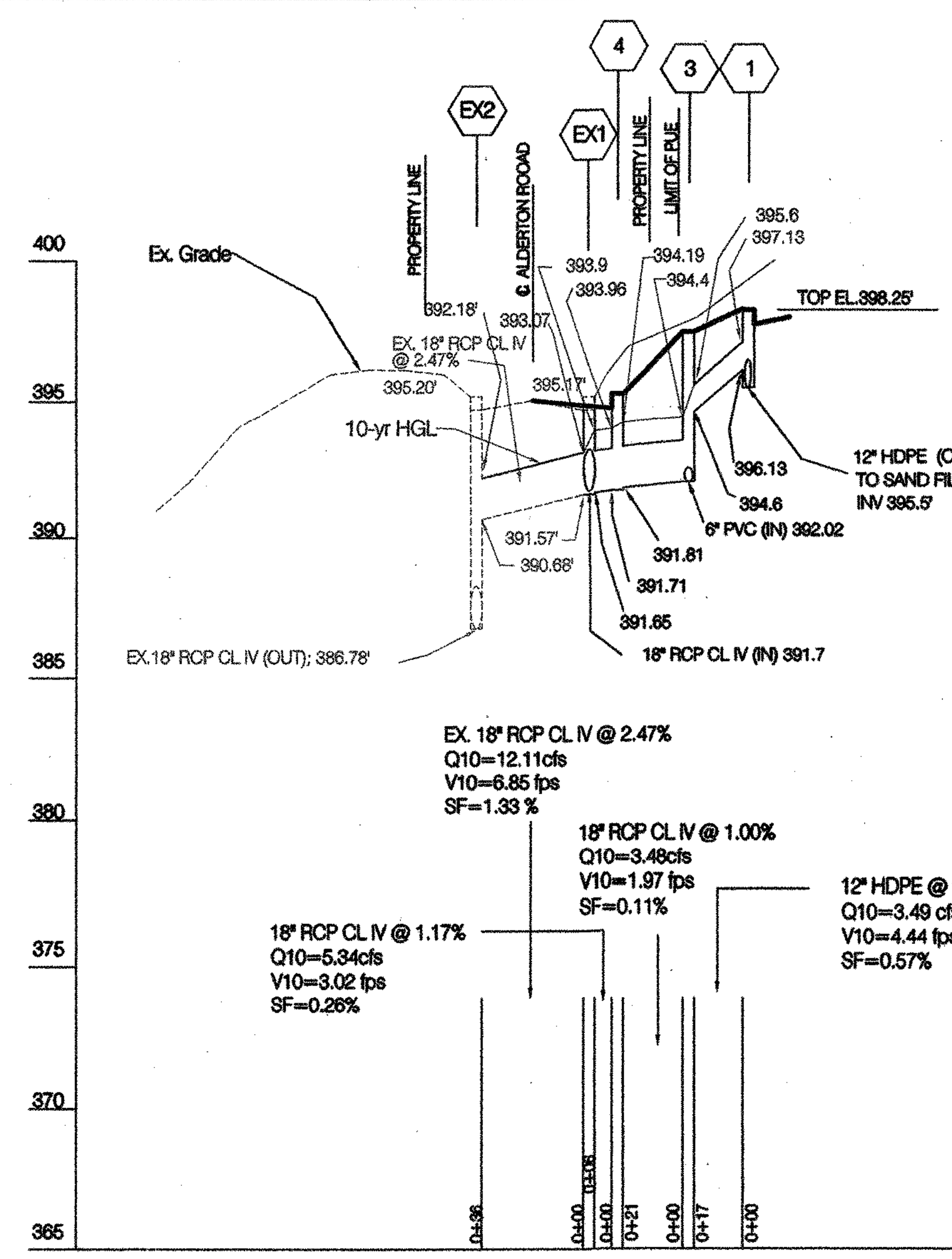

STORM DRAIN PROFILE FROM STR#3 TO STR#EX1

SCALE: 1" = 5' VERT.
1" = 50' HORIZ.

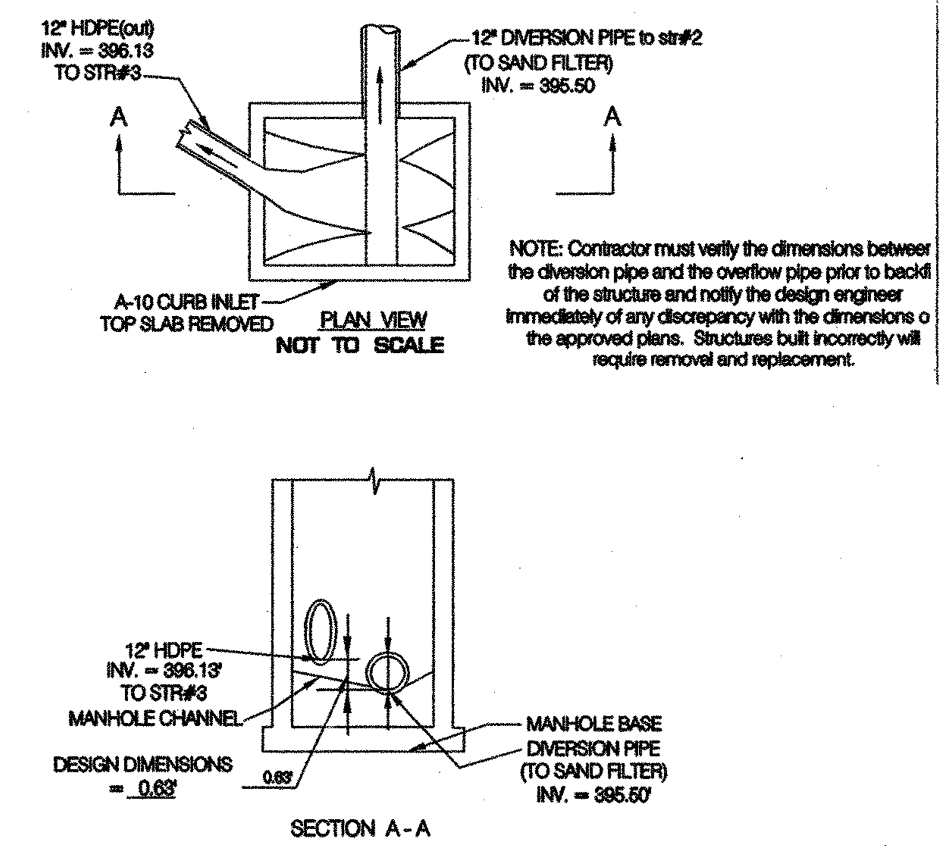

NOTE: THE DIVERSION PIPE SIZE = 12" DIA. THEREFORE GRATE IS NOT REQUIRED.

DETAILS OF SPLITTER STRUCTURE #1

NOT TO SCALE

NOTE: FOLLOWING IS THE CONSTRUCTION SPECIFICATION FOR SAND FILTER ONLY:

Montgomery County Maryland
Department of Permitting Services
255 Rockville Pike, 2nd Floor
Rockville, Maryland 20850-4153
(240) 777-6300 Fax (240) 777-6339
http://permittingservices.montgomerycountymd.gov

AN ALL-AMERICA COMMUNITY

MONTGOMERY COUNTY DEPARTMENT OF PERMITTING SERVICES
Construction Specifications For Shallow Facilities
Revised September 2005

Definition: A shallow facility is any non-structural stormwater management facility, which is constructed on or excavated into the ground, and is not defined as a pond by current Maryland Pond-378 criteria. These will include but are not limited to small stormwater detention basins, and Montgomery County sand filters. Specifications for infiltration trenches and bio filtration facilities will be found in the design specifications for those devices. All references to ASTM, MSHA and AASHTO specifications apply to the most recent version.

Where applicable, these specifications must be placed on the design plans. List the facilities to which these specifications apply.

I. **Construction Inspection by Designated Engineer**

The construction of the facility shall be under the supervision of a Registered Professional Engineer. The engineer must submit written certification that the structure and embankment have been built in accordance with the approved plans to the Department of Permitting Services (DPS) along with a record drawing, soil compaction tests, concrete tests, and other required construction documentation. This should be done immediately following the completion of the project, unless otherwise designated on the plans. The engineer shall have the responsibility and authority to make minor changes in the plans in order to compensate for unusual soil conditions encountered during construction as long as changes do not adversely affect the integrity of the facility. Major changes to the design, which may result from site conditions encountered during construction, must be reviewed and approved by the Design Engineer, and DPS prior to the initiation of construction.

II. Site Preparation

Areas designated for borrow areas, embankment, structural works, filter, and storage areas, shall be cleared, grubbed and stripped of topsoil. All trees, vegetation, roots, and other objectionable material shall be removed. Channel banks and sharp breaks shall be sloped to no steeper than 1:1.

All cleared and grubbed material shall be disposed of in a proper manner. A sufficient quantity of topsoil must be stockpiled in a suitable location for use on the embankment and other designated areas.

III. Earth Fill For Facility Embankments

A. **Material** - The fill material shall be taken from approved designated borrow areas. It shall be free of roots, stumps, wood, rubbish, stones greater than six inches, frozen or other objectionable materials. Fill material for the embankment core and cut off trench shall conform to Unified Soil Classification GC, SC, CH or CL. Consideration may be given to the use of other materials in the embankment if design and construction are supervised by a geotechnical engineer and approved by MCDPS.

B. **Placement** - Areas on which fill is to be placed shall be scarified prior to placement of fill. Fill materials shall be placed in maximum eight inch thick (before compaction) layers, which are to be continuous over the entire length of the fill. The most permeable borrow material shall be placed in the downstream portions of the embankment. Pipes or underdrains must be installed concurrent with embankment construction to avoid excavation into the completed embankment at a later time.

C. **Compaction** - The movement of the hauling and spreading equipment over the fill shall be controlled so that the entire surface of each lift shall be traversed by not less than one tread track of the equipment or compaction shall be achieved by a minimum of four complete passes of a sheepsfoot, rubber tired or vibratory roller. Fill material shall contain sufficient moisture such that the required degree of compaction will be obtained with the equipment used. The fill material shall contain sufficient moisture so that if formed into a ball it will not crumble, yet not be so wet that water can be squeezed out.

The density of each lift shall not be less than 95% of maximum dry density with a moisture content within ±2% of the optimum. Each layer of fill shall be compacted as necessary to obtain that density, and is to be certified by the Engineer at the time of construction. All compaction is to be determined by AASHTO Method T-99 (Standard Proctor).

D. **Cut Off Trench** - The cutoff trench shall be excavated into impervious material along or parallel to the centerline of the embankment as shown on the plans. The bottom width of the trench shall be governed by the equipment used for excavation, with the minimum width being two feet. The depth shall be at least two feet below existing grade or as shown on the plans. The side slopes of the trench shall be one to one, or flatter. The backfill shall be compacted with construction equipment, roller, or hand tampers to assure maximum density and minimum permeability.

E. **Embankment Core** - The core shall be parallel to the centerline of the embankment as shown on the plans. The top width of the core shall be minimum of two feet. The height shall extend up to at least the 10-year water elevation or as shown on the plans. The side slopes shall be 1 to 1 or flatter. The core shall be compacted with construction equipment, rollers, or hand tampers to assure maximum density and minimum permeability. In addition, the core shall be placed concurrently with the outer shell of the embankment.

F. **Earth Cuts** - For all excavation perpendicular to the centerline of the embankment, the slope of the bonding surfaces between the existing material in place and the fill to be placed shall not be steeper than a ratio of 2H:1V.

IV. Structure Backfill

Backfill adjacent to pipes or structures shall be of the type and quality conforming to that specified for the adjoining fill material. The fill shall be placed in horizontal layers not to exceed four inches in thickness and compacted by hand tampers or other manually directed compaction equipment. The material must completely fill all spaces under and adjacent to the pipe. At no time during the backfilling operation shall driven equipment be allowed to operate closer than four feet, measured horizontally, to any part of a structure. Under no circumstances shall equipment be driven over any part of a concrete structure or pipe, unless there is a compacted fill of 24 inches or greater over the structure or pipe.

Structure backfill may be flowable fill meeting the requirements of Maryland Department of Transportation, State Highway Administration Standard Specifications for Construction and Materials, Section 313 as modified. The mixture shall have a 100-200 psi; 28 day unconfined compressive strength. The flowable fill shall have a minimum pH of 4.0 and a minimum resistivity of 2,000 ohm-cm. Material shall be placed such that a minimum of six inches of flowable fill shall be under (bedding), over, and on the sides of the pipe. It only needs to extend up to the spring line for rigid conduits. Average slump of the fill shall be 7 inches to assure flowability of the material. Adequate measures shall be taken (sand bags, etc.) to prevent floating the pipe. Any adjoining soil fill shall be placed in horizontal layers not to exceed four inches in thickness and compacted by hand tampers or other manually directed compaction equipment. The material shall completely fill all voids adjacent to the flowable fill zone. At no time during the back filling operation shall driven equipment be allowed to operate closer than four feet, measured horizontally, to any part of a structure. Under no circumstances shall equipment be driven over any part of a structure or pipe unless there is a compacted fill of 24 inches or greater over the structure or pipe. Backfill material outside the structural backfill (flowable fill) zone shall be of the type and quality conforming to that specified for the core of the embankment or other embankment materials.

V. Pipe Conduits – All pipes shall be circular in cross section.

A. Polyvinyl Chloride (PVC) Pipe - All of the following criteria shall apply for PVC pipe:

1. Materials - PVC pipe and appurtenances shall be schedule 40 PVC-1120 or PVC-1220 conforming to ASTM D-1785 or ASTM D-2241.
2. Joints and connections to anti-seep collars shall be completely watertight. Anti-seep collars are not required for pipe diameters of 6" or less.
3. Bedding - The pipe shall be firmly and uniformly bedded throughout its entire length. Where rock, soft, spongy, or other unstable soil is encountered, all such material shall be removed and replaced with suitable earth compacted to provide adequate support.
4. Backfilling shall conform to "Structure Backfill."
5. Other details (anti-seep collars, valves, etc.) shall be shown on the drawings.

B. Reinforced Concrete Pipe (RCP) - All of the following criteria shall apply for RCP pipe:

1. Materials - RCP shall have bell and spigot joints with rubber gaskets and shall meet ASTM Designation C-361. Pipes must be labeled in full accordance with ASTM-361, including the ASTM-361 designation on the inside of each section of pipe, and all pipes must be clearly marked by the manufacturer prior to delivery to the job site. Pipes with multiple designations will be rejected.
2. Bedding - Reinforced concrete pipe conduits shall be laid in a concrete bedding/cradle for their entire length. This bedding/cradle shall consist of high slump concrete placed under the pipe and up the sides of the pipe at least 50% of its outside diameter with a minimum thickness of 6-inches. Where a concrete cradle is not needed for structural reasons, flowable fill may be used as described in the "Structure Backfill" section of this standard. Gravel bedding is not permitted.
3. Laying Pipe - Bell and spigot pipe shall be placed with the bell end upstream. Joints shall be made in accordance with recommendations of the manufacturer of the material. After the joints are sealed for the entire line, the bedding shall be placed so that all spaces under the pipe are filled. Care shall be exercised to prevent any deviation from the original line and grade of the pipe. The first joint must be located within 4 feet from the riser.
4. Backfilling shall conform to "Structure backfill".
5. Other details (anti-seep collars, valves, etc.) shall be shown on the drawings.

VI. Sand

Sand shall be washed and meet the latest requirements of ASTM C-33 (Fine Aggregate). If the sand is to be stored on site prior to placement, it shall be protected from contamination. Manufactured sand is not acceptable.

VII. Gravel

Gravel shall be washed and meet the requirements of the latest edition of the Maryland Depa of Transportation, State Highway Administration Standards and Specifications for Constructi Materials, Section 901. Gravel size shall be as shown on the approved drawings. If the grav... be stored on site prior to placement, it shall be protected from contamination.

VIII. Concrete

Concrete placement and strength shall meet the requirements of the latest edition of the Maryland Department of Transportation, State Highway Administration Standard Specifications for Construction and Materials, Sections 414 and 902, Mix No. 3.

IX. Rock Riprap

Rock riprap shall meet the requirements of the latest edition of the Maryland Department of Transportation, State Highway Administration Standard Specifications for Construction and Materials, Sections 310, 311, and 902.

The riprap shall be placed to the required thickness in one operation. The rock shall be delivered and placed in a manner that will insure the riprap in place shall be reasonably homogeneous with the larger rocks uniformly distributed and firmly in contact one to another with the smaller rocks filling the voids between the larger rocks. Geotextile shall be placed under all riprap and shall be per the requirements of the latest edition of the Maryland Department of Transportation, State Highway Administration Standard Specifications for Construction and Materials, Section 921.09, Class C.

X. Stabilization

All borrow areas shall be graded to provide proper drainage and be left in a sightly condition. All exposed surfaces of the embankment, spillway, spoil and borrow areas, and berms shall be stabilized by topsoiling, seeding, liming, fertilizing, and mulching in accordance with the latest edition of the Maryland Soil Conservation Service Standards and Specifications for Critical Area Planting (MD-342) or as shown on the accompanying drawings.

INLET DATA TABLE

STR NO	AREA	Tc	I10/I100	R10/R100
	AC	MIN	IN/HR	
1	0.99	10	5.85	0.55
10	5.71	16.22	4.83	0.28 0.38
11	0.60	10	5.85	0.54 0.64

T_c = TIME OF CONCENTRATION MIN
R_{10} = RUNOFF COEIFICIENT FOR 10 YR RUNOFF
R_{100} = RUNOFF COEIFICIENT FOR 100 YR RUNOFF
I_{10} = 10-YR RAINFALL INTENSITY IN/HR
I_{100} = 100-YR RAINFALL INTENSITY IN/HR
Q_{10} = 10-YR RUNOFF CFS
Q_{100} = 100-YR RUNOFF CFS

PROFESSIONAL CERTIFICATION

I hereby certify that these documents were prepared or approved by me, and that I am a duly licensed professional engineer under the laws of the State of Maryland, License No. 8231
Expiration Date: 11/28/11 .

Chander S. Dhalwala, P.E. Maryland Registration No. 8231 — 3/14/2011 Date

STATE OF MARYLAND — CHANDER S. DHALWALA — No. 8231 — PROFESSIONAL ENGINEER

OWNER / APPLICANT
MIRACLE TEMPLE ASSEMBLY OF GOD
2457 LINDEN LANE
SILVER SPRING, MD 20910
PH.- (301) 868-5900

"MISS UTILITY"
FOR LOCATION OF UTILITIES CALL
1-800-257-7777 48 HOURS IN ADVANCE
OF ANY WORK IN THIS VICINITY.

DEPARTMENT OF PERMITTING SERVICES

Isiah Leggett, *County Executive* — Carla Reid, *Director*

July 31, 2009

Ms. Stephanie Clevenger
RDA Engineering Co. Inc.
14603 Main Street
Upper Marlboro, MD 20772

Re: **REVISED** Stormwater Management ***CONCEPT***
Request for Miracle Temple
Preliminary Plan #: N/A
SM File #: 230470
Tract Size/Zone: 2.23 acres / R-200
Total Concept Area: 2.23 acres
Lots/Block: Part of Lot 8, Harry M. Martin Tract
Parcel(s): N/A
Watershed: Northwest Branch

Dear Ms. Clevenger:

Based on a review by the Department of Permitting Services Review Staff, the stormwater management concept for the above mentioned site is **acceptable**. The stormwater management concept consists of on-site ESD measures via construction of a Montgomery County Sand Filter, Infiltration Trench, and use of open section grassed water quality swales in the right-of-way along Woodwell Road.

The following items will need to be addressed during the detailed sediment control/stormwater management plan stage:

1. Prior to permanent vegetative stabilization, all disturbed areas must be topsoiled per the latest Montgomery County Standards and Specifications for Topsoiling.
2. A detailed review of the stormwater management computations will occur at the time of detailed plan review.
3. An engineered sediment control plan must be submitted for this development.
4. The Infiltration Trench, including its associated berm, must be located completely outside the PUE.
5. Improvements along Woodwell Road will be open section and will include construction of water quality swales.
6. The minimum surface area for a Montgomery County Sand Filter is 200 square feet.
7. You may wish to consider using a Bio Filter instead of the proposed Montgomery County Sand Filter. It would seem to be feasible since the drainage area is small and the computed water quality depth is less than twelve inches.
8. Stormwater Management easements and covenants are required for all stormwater elements on the subject property.

255 Rockville Pike, 2nd Floor • Rockville, Maryland 20850 • 240-777-6300 • 240-777-6256 TTY
www.montgomerycountymd.gov

9. This stormwater concept approval supersedes the approval granted on August 29, 2007.

This list may not be all-inclusive and may change based on available information at the time.

Payment of a stormwater management contribution in accordance with Section 2 of the Stormwater Management Regulation 4-90 is not required.

This letter must appear on the sediment control/stormwater management plan at its initial submittal. The concept approval is based on all stormwater management structures being located outside of the Public Utility Easement, the Public Improvement Easement, and the Public Right of Way unless specifically approved on the concept plan. Any divergence from the information provided to this office; or additional information received during the development process; or a change in an applicable Executive Regulation may constitute grounds to rescind or amend any approval actions taken, and to reevaluate the site for additional or amended stormwater management requirements. If there are subsequent additions or modifications to the development, a separate concept request shall be required.

If you have any questions regarding these actions, please feel free to contact Mark Etheridge at 240-777-6338.

Sincerely,

Richard R. Brush, Manager
Water Resources Section
Division of Land Development Services

RRB:dm mce

cc: C. Conlon
M. Pfefferle
SM File # 230470

QN - on; Acres: 2.2
QL - on; Acres: 2.2
Recharge is provided

2

MONTGOMERY COUNTY PLANTING MEDIA SPECIFICATION FOR BIO-FILTERS

Gravel Bed
The gravel layer surrounding the underdrain pipe(s) must meet MSHA size #7 (Table 901A), and must provide a minimum of 6 inches cover over the pipe(s), and minimum 3 inches under the pipe. No geotextile or filter fabric is allowed anywhere within the filter media (stone and sand).

Sand Bed
A minimum 6-inch fine aggregate sand layer shall be provided below the soil filter/planting media. A sand window shall extend from the sand filter to the surface of the planting media opposite from the inflow point. (figure 1). The sand window will be a minimum of 10 sq. ft. ASTM C33 Fine Aggregate Concrete Sand is required. Manufactured sand or stone dust is not acceptable.

Soil Filter/Planting Media
The planting media shall consist of 1/3 perlite or Solite, 1/3 compost and 1/3 topsoil. The perlite shall be coarse grade horticultural perlite. The compost shall be high grade compost free of stones and partially composted woody material. The soil shall meet the following minimum criteria: contain no more than 10% clay, 30 - 55% silt and 35 - 60% sand. The soil shall be free of stones, stumps, roots or other similar objects larger than 2 inches. The first layer of the planting media shall be lightly tilled to mix into the sand layer, so not to create a definitive boundary. The planting material shall be flooded after placement. Any settlement that occurs shall be filled back to the design elevation.

Mulch
The mulch layer is an important part of the biofilter. Much of the pollutant removal capacity of the biofilter is within the mulch layer. The surface mulch layer will consist of standard fine shredded aged hardwood mulch. The mulch should be applied uniformly to a depth of 2 to 3 inches. Yearly replenishing may be necessary. Pine bark is not acceptable.

Plant Materials
Plants, through their pollutant uptake and evapotranspiration of stormwater runoff, play a key role in the overall effectiveness of the biofiltration device. Both the number and type of tree and shrub plantings for the system may vary, especially where aesthetics or other considerations are critical to site development. While native plants are encouraged, they are not always appropriate in all situations. While no hard planting rule exists, the plants should be a mix of trees, shrubs and herbaceous materials. However, there should be 2 to 3 shrubs planted per tree and herbaceous plantings shall make up 40 % of the total number of plants. Trees shall be a minimum of 2 ½ in. caliper, shrubs shall be minimum 2 gal. size and herbaceous plants shall be a minimum 1 gal size. Mature plant canopy should cover 85 % of the biofilter. A landscape plan will be required as part of the plan. The plan shall be sealed by a registered landscape architect. Since the plants are an integral part of the BF, no changes to the approved landscape plan will be allowed without prior approval from DPS.

STORMDRAIN PIPE SUMMARY		
SIZE	TYPE	LENGTH
12"	HDPE	26'
18"	RCP CL IV	70'
	TOTAL	= 96'

UNDER DRAIN PIPE SYSTEM
TOTAL LENGTH OF 6" PERF. PVC PIPE=21'
TOTAL LENGTH OF 6" NON-PERF. PIPE=53.5'
INVERT EL OF 6" PERF. PIPES WITHIN
SAND FILTER=392.17' AT 0.0% SLOPE.
INVERT EL OF 6" NON PERF. PIPE
AT STR#3 =392.02'
SLOPE OF THE NON-PERF. PIPE=0.28%

STORMDRAIN PIPE SCHEDULE

BONDED & INSPECTED BY	FROM	TO	SIZE	TYPE	LENGTH
PRIVATE	1	3	12"	HDPE	14'
	3	4	18"	RCP CL IV	21'
	4	EX1	18"	RCP CL IV	6'
	5	EX1	18"	RCP CL IV	43'
	1	2	12"	HDPE	12'
				TOTAL =	96'

STORMDRAIN STRUCTURE SCHEDULE

BONDED AND INSPECT BY	NO.	TYPE	WIDTH	TOP ELEVATION UPPER	TOP ELEVATION LOWER	INV. ELEV.	STANDARD DETAIL
BONDED	2	END SECTION	12" DIA	-	-	395.30	MSHA MD / 371.01
	1	* A-10 INLET	2.5'	398.67	398.25	395.50	MC / 501-01
PRIVATE	3	SQ. SHALLOW MANHOLE	48"	397.49	397.49	392.02	MSHA MD / 383.0
	4	A-10 INLET	2.5'	395.25	395.25	391.71	MC / 501-01
	5	A-10 INLET	2.5	395.59	395.81	392.6	MC / 501-01
	EX1	**SQ. SHALLOW MANHOLE	48"	394.83	394.83	***391.57	MSHA MD / 383.0

* MODIFIED A-10 CURB INLET TO CONNECT THE TRENCH DRAIN . (NEENAH STD R 4990 AX)
** EX. STR#1 SHOULD BE REPLACED BY SQ. SHALLOW MANHOLE.
ALL RCP PIPES SHOULD BE CONNECTED WITH GASKETS.
*** EX. INV. ELEVATION

MCDPS
APPROVED FOR:

Stormwater Management: SF/FS/INF/RR(S)
4-5-2011
Reviewed — Date 4/5/11
Approved — Date
230470
SM FILE #

Sediment Control Technical Requirements:
4-5-2011
Reviewed — Date 4/5/11
Approved — Date

Administrative Requirements:
4-5-2011
Reviewed — Date
233735
SEDIMENT CONTROL PERMIT #

NOTE
MCDPS APPROVAL OF THIS PLAN WILL EXPIRE ONE YEAR FROM THE DATE OF APPROVAL, IF THE PROJECT HAS NOT STARTED, UNLESS THE PERMIT HAS BEEN EXTENDED.
THIS APPROVAL DOES NOT NEGATE THE NEED OF A MCDPS ACCESS PERMIT.

RDA
RDA ENGINEERING CO. INC.
ENGINEERS
LAND PLANNERS
LAND SURVEYORS
14603 MAIN STREET – UPPER MARLBORO, MD. 20772
UPPER MARLBORO (301)627-3100 (301)952-8200
PRINCE FREDERICK (301)855-9500 (410)535-8600

REVISIONS

JOB NO.	W-685
SCALE:	AS SHOWN
DESIGNED BY:	RH
DRAWN BY:	ERV
CHECKED BY:	CSD
DATE:	APRIL 2008

STORM DRAIN PROFILES & DETAIL SHEET

MIRACLE TEMPLE ASSEMBLY OF GOD

(13th) ELECTION DISTRICT
MONTGOMERY COUNTY, MARYLAND

SHEET4 of 9