PLUMBING NOTES

1. ALL PIPING SHALL BE PROVIDED WITH SECTIONAL SHUT-OFF VALVES AND ACCESS PANEL FOR ALL HIDDEN VALVES. PROVIDE ISOLATION VALVES FOR ALL PLUMBING FIXTURES.
2. USE ONLY LEAD FREE SOLDER.
3. ALL WORK SHALL BE GUARANTEED AGAINST DEFECTS, LEAKS, LACK OF PROPER SYSTEM PERFORMANCE OR NON-OPERATION FOR A PERIOD OF ONE YEAR AFTER DATED OF FINAL ACCEPTANCE OF WORK BY OWNER.
4. ALL WORK SHALL BE COORDINATED WITH ALL TRADES PRIOR TO INSTALLATION.
5. CONTRACTOR SHALL OBTAIN AND PAY FOR ALL PERMITS ASSOCIATED WITH THIS PROJECT. UPON COMPLETION OF WORK, PRESENT OWNER WITH THE LOCAL AUTHORITY'S CERTIFICATE OF FINAL INSPECTION.
6. ALL EXPOSED PIPING TO FIXTURES SHALL BE HEAVILY CHROME-PLATED.
7. MAKE FINAL CONNECTIONS AFTER THE FIXTURES AND EQUIPMENT ARE SET IN PLACE. ALL REQUIRED TRIM, FAUCETS AND MINOR ITEMS NECESSARY FOR A COMPLETE FUNCTIONING INSTALLATION, SUCH AS STRAINERS, TRAPS, TAILPIECES, ESCUTCHEONS, ETC., SHALL BE FURNISHED AND INSTALLED BY THE CONTRACTOR IN ACCORDANCE WITH EQUIPMENT REQUIREMENTS. ALL FAUCETS TO BE HEAVILY CHROME-PLATED.
8. DOMESTIC HOT WATER/COLD WATER PIPING SHALL BE TYPE "L" SEAMLESS COPPER TUBING, ASTM B 88, WITH LEAD-FREE BRAZED WROUGHT COPPER FITTINGS.
9. SANITARY WASTE AND VENT PIPE SHALL BE NO-HUB SERVICE PVC IRON PIPE AND FITTINGS IN ACCORDANCE WITH CISPI 301 AND ASME B16.4., OR SOLDER JOINED COPPER TUBING, ASTM B306, WITH WROUGHT COPPER DRAINAGE FITTINGS, ASME B16.29.
10. HANGERS SHALL BE OF SIMILAR MATERIAL AS PIPING TO AVOID GALVANIC ACTION IN ACCORDANCE WITH MSS-SP-69, AND LOCATED AT INTERVALS NOT TO EXCEED 6'-0" O.C. WHERE "HUBLESS" PIPE IS BEING USED, PROVIDE HANGERS ON EITHER SIDE OF THE JOINTS AS RECOMMENDED BY CISPI BULLETIN 310. FOR INSULATED PIPING, INSULATION SHALL EXTEND CONTINUOUSLY THRU HANGER WITH OUT INTERRUPTION. PROVIDE SADDLE TO PROTECT INSULATION FROM COMPRESSION.
11. SOIL, WASTE AND VENT PIPING SHALL BE INSTALLED IN ACCORDANCE WITH CODE. HORIZONTAL DRAINAGE PIPING SHALL SLOPE NOT LESS THAN 1/4" PER FOOT, UNLESS OTHERWISE INDICATED. DOMESTIC WATER SHALL BE SLOPED TO DRAIN POINTS AND HAVE WATER HAMMER ARRESTERS INSTALLED IN ACCORDANCE WITH PDI STANDARD WH 201.
12. ENTIRE HOT AND COLD DOMESTIC WATER PIPING SHALL BE INSULATED WITH FIBERGLASS SECTIONS, 1" THICK WITH ALL SERVICE JACKETS, IN ACCORDANCE WITH U.L. 723 AND NFPA 22, OR "ARMAFLEX" 2000 SELF-SEAL, 1/2" THICK. FOR EXPOSED PIPING AT ADA ACCESSIBLE SINKS, PROVIDE INSULATION TO INCLUDE DRAIN PER ADA STANDARD.
13. TEST HOT AND COLD WATER PIPING HYDROSTATIC ALLY AT PRESSURE OF 100 P.S.I. FOR A PERIOD OF (4) HOURS WITHOUT EVIDENCE OF PRESSURE LOSS.
14. TEST PIPING PRIOR TO INSTALLATION OF PIPE INSULATION. REMAKE ANY LEAKING JOINTS AND RETEST. "STOP LEAK" ADDITIVES SHALL NOT BE PERMITTED.
15. AFTER FINAL TESTING FOR LEAKS, ALL NEW POTABLE WATER LINES SHALL BE THOROUGHLY FLUSHED BY THE PLUMBING CONTRACTOR TO REMOVE FOREIGN MATERIAL. BEFORE PLACING THE SYSTEM IN SERVICE, CONTRACTOR SHALL ENGAGE A QUALIFIED SERVICE ORGANIZATION TO STERILIZE THE NEW WATER LINES IN ACCORDANCE WITH APPLICABLE REGULATIONS. A CERTIFICATE OF COMPLIANCE SHALL BE PROVIDED TO THE OWNER.
16. SUBMIT OPERATING AND MAINTENANCE MANUALS AND WARRANTY CERTIFICATES TO OWNER.

PLUMBING FIXTURE AND EQUIPMENT SPECIFICATIONS

P-1 ADA

WATER CLOSET: AMERICAN STANDARD – CHAMPION RIGHT HEIGHT, 2002.014, WHITE, FLOOR MOUNTED, ELONGATED BOWL, PROVIDE CHROME PLATED BRASS ANGLE STOP VALVES, SUPPLY PIPES.

SEAT: CHURCH 295C, OPEN FRONT SEAT AND CHECK HINGE, WHITE

P-2 ADA

URINAL: AMERICAN STANDARD – WASHBROOK FLOWISE, 0.125 GPF ULTRA HIGH EFFICIENCY PINT URINAL SYSTEM. 6590.525 WITH SELECTRONIC FLUSH VALVE, WHITE.

P-3 ADA

LAVATORY: AMERICAN STANDARD – CADET, 0427.444SG, 19" DIAMETER, CENTERSET HOLES, WHITE

FAUCET: AMERICAN STANDARD – RELIANT 3, 7385.003, SINGLE CONTROL, CENTER SET, POLISHED CHROME, GRID DRAIN. PROVIDE CHROME PLATED BRASS ANGLE STOP VALVES, SUPPLY PIPES, 1-1/2" P-TRAP AND ESCUTHEON, TRUEBRO HANDI LAV GUARD INSULATION FOR EXPOSED PIPING OR APPROVED EQUAL. PROVIDE THERMOSTATIC MIXING VALVE.

P-4 ADA

WATER COOLER: HALSEY TAYLOR – OLV-2, SER-Q, BI-LEVEL, STAINLESS STEEL.

P-5

SERVICE SINK: FIAT – FL-1 FLOOR MOUNTED.

FAUCET: FIAT – A-1

P-6 ADA

SINK: ELKAY – LUSTERTONE SINGLE BOWL SINK, LRAD2222, 19"L X 16"W X 5-1/2" DEEP BOWL, STAINLESS STEEL.

FAUCET: ELKAY – LK4102, SINGLE LEVER, LESS SPRAY, CHROME. PROVIDE CHROME PLATED BRASS ANGLE STOP VALVES, SUPPLY PIPES, 1-1/2" P-TRAP AND ESCUTCHEON.

FD

FLOOR DRAIN: JOSAM – 5A SERIES, 1/2" TRAP PRIMER, ROUND NIKALOY SUPER FLOW STRAINER.

FIRE PROTECTION NOTES

1. SPRINKLER CONTRACTOR SHALL DESIGN AND CONSTRUCT NEW SPRINKLER SYSTEM IN ORDER TO PROVIDE HYDRAULICALLY DESIGNED WET PIPE SYSTEM FOR THE BUILDING IN ACCORDANCE WITH NFPA 13 AND THE REQUIREMENTS OF LOCAL JURISDICTION, AND THE BASE BUILDING SPECIFICATIONS.
2. DESIGN OF THE SPRINKLER SYSTEM SHALL BE SUBMITTED TO THE LOCAL JURISDICTION FIRE MARSHAL'S OFFICE FOR APPROVAL.
3. SPRINKLER PIPING AND THE HEADS SHALL COMPLY WITH THE REQUIREMENTS OF THE BASE BUILDING.
4. INSTALLATION OF THE SPRINKLER PIPING AND HEADS SHALL BE COORDINATED WITH NEW DUCTWORK, PIPING, MECHANICAL EQUIPMENT, CEILING TILES, LIGHTING FIXTURES, DIFFUSERS AND STRUCTURAL MEMBERS. EXISTING SPRINKLER PIPING IN CONFLICT WITH THE NEW DUCTWORK, PIPING, MECHANICAL EQUIPMENT, CEILING TILES, LIGHTING FIXTURES AND DIFFUSERS SHALL BE RELOCATED AS REQUIRED.
5. SPRINKLER CONTRACTOR SHALL VISIT THE SITE TO VERIFY EXISTING CONDITIONS PRIOR TO BIDDING. UPON COMPLETION OF THE TENANT SPACE BUT PRIOR TO THE FINAL PAYMENT. THE SPRINKLER CONTRACTOR SHALL PROVIDE THE OWNER A MYLAR REPRODUCIBLE AND THE BUILDING OWNER A BLUE LINE SET OF FINAL APPROVED SPRINKLER DRAWINGS.
6. SPRINKLER SYSTEM IN ANY ADJACENT TO THE PROJECT AREA AFFECTED BY THE MODIFICATIONS TO THE SPRINKLER SYSTEM IN THE PROJECT AREA SHALL ALSO BE MODIFIED IN ORDER TO MAINTAIN COMPLIANCE WITH THE REQUIREMENTS OF NFPA 13.
7. AT THE CONCLUSION OF WORK CONTRACTOR SHALL TEST THE SPRINKLER SYSTEM FOR 2 HOURS AT 200 PSI PER NFPA REQUIREMENTS.
8. SPRINKLER HEADS ARE TO BE CENTERED IN CEILING TILE.

MISCELLANEOUS EQUIPMENT SCHEDULE

1. ELECTRICAL WATER HEATER – 1 (EWH-1): EQUAL TO EEMAX INSTANTANEOUS WATER HEATER WITH 3.0KW CAPACITY AT 208V-1ø, MOUNT UNDER SINK.
2. ELECTRICAL WATER HEATER – 2 (EWH-2): 30 GALLON STORAGE TANK WITH 2.5 KW ELEMENT AT 208V-1ø EQUAL TO STATE PCE 30 WITH 5 YEAR WARRANTY.
3. ELECTRICAL WATER HEATER – 3 (EWH-3): 20 GALLON STORAGE TANK WITH 1.5 KW ELEMENT AT 120V-1ø EQUAL TO STATE PCE 20 WITH 5 YEAR WARRANTY.

PROVIDE DIELECTRIC HEAT TRAPS W/ WATER HEATERS.

PLUMBING LEGEND

CW	COLD WATER
EWH	ELECTRIC WATER HEATER
EWC	ELECTRIC WATER COOLERS
FD	FLOOR DRAIN
G	NATURAL GAS
W	WASTE PIPING
WH	WALL HYDRANT
U/F	UNDER FLOOR
TP	TRAP PRIMER LINE
VTR	VENT THROUGH ROOF

PLUMBING FIXTURE SCHEDULE

FIXTURE	TYPE	WASTE	VENT	CW	HW
P-1	TOILET	4"	2"	1/2"	–
P-2	URINAL	2"	1-1/2"	3/4"	–
P-3	LAVATORY	1-1/2"	1-1/2"	1/2"	1/2"
P-5	SERVICE SINK	2"	1-1/2"	1/2"	1/2"
P-6	COUNTER SINK	1-1/2"	1-1/2"	1/2"	1/2"
FD	FLOOR DRAIN	3"	1-1/2"	–	–

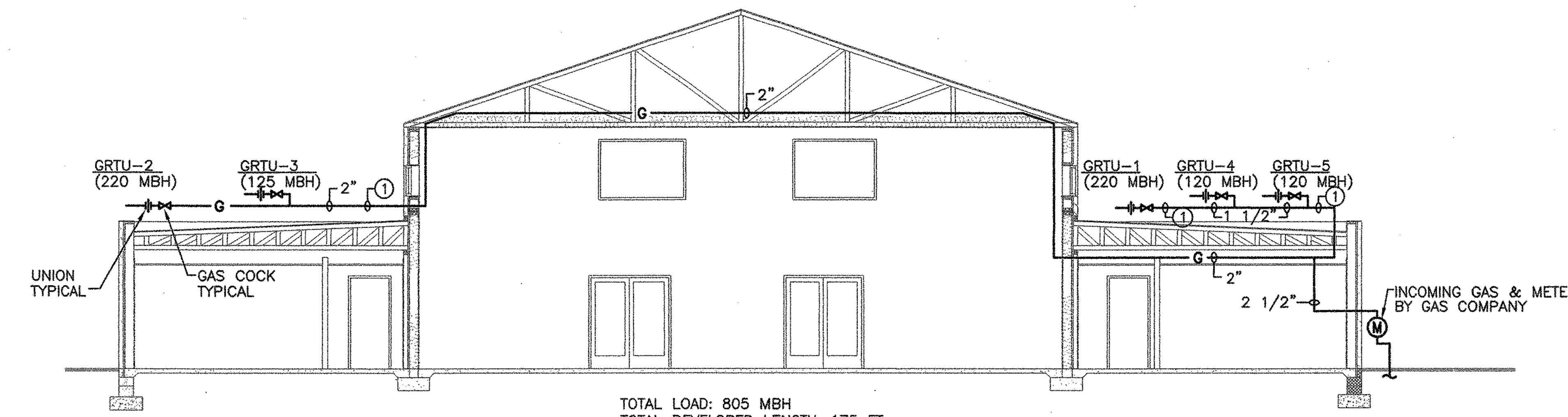

TOTAL LOAD: 805 MBH
TOTAL DEVELOPED LENGTH: 175 FT.

NOTE:
(1) RUN EXPOSED ON ROOF.

NATURAL GAS PIPING DIAGRAM
NO SCALE

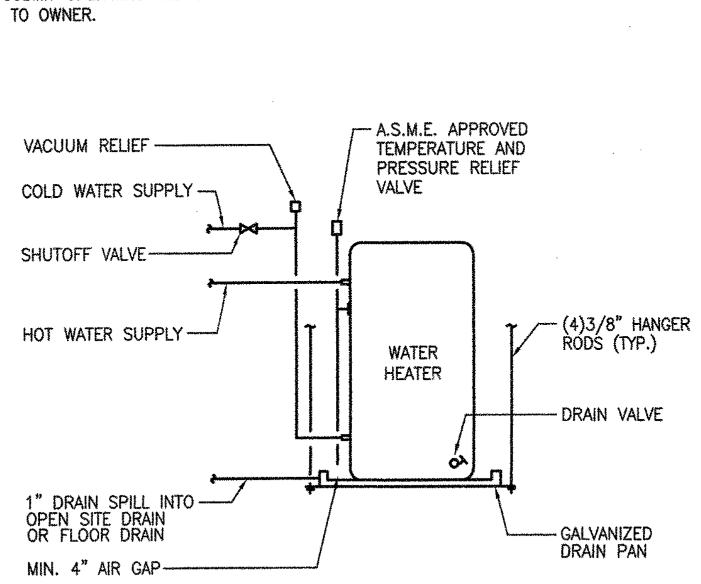

ELECTRIC WATER HEATER DETAIL
NO SCALE CEILING HUNG

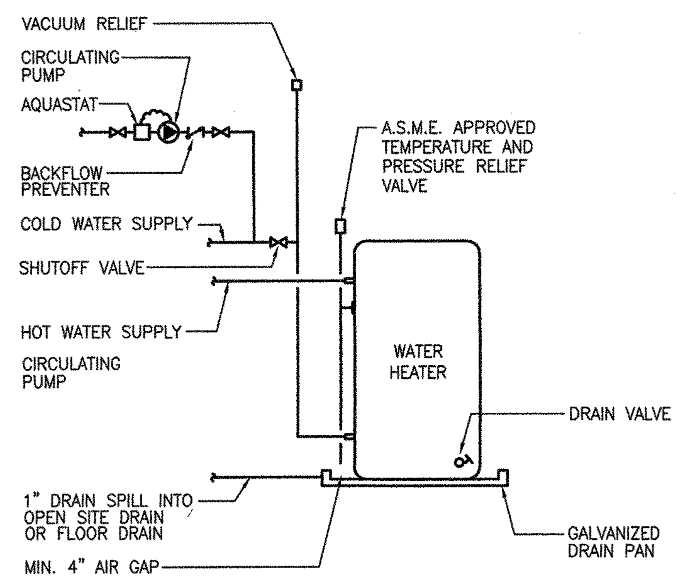

ELECTRIC WATER HEATER DETAIL
NO SCALE FLOOR MOUNTED

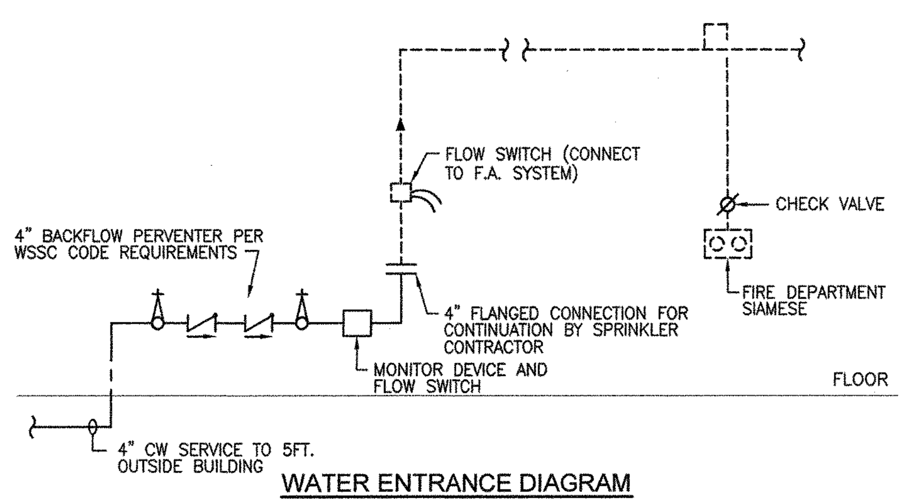

WATER ENTRANCE DIAGRAM
NO SCALE

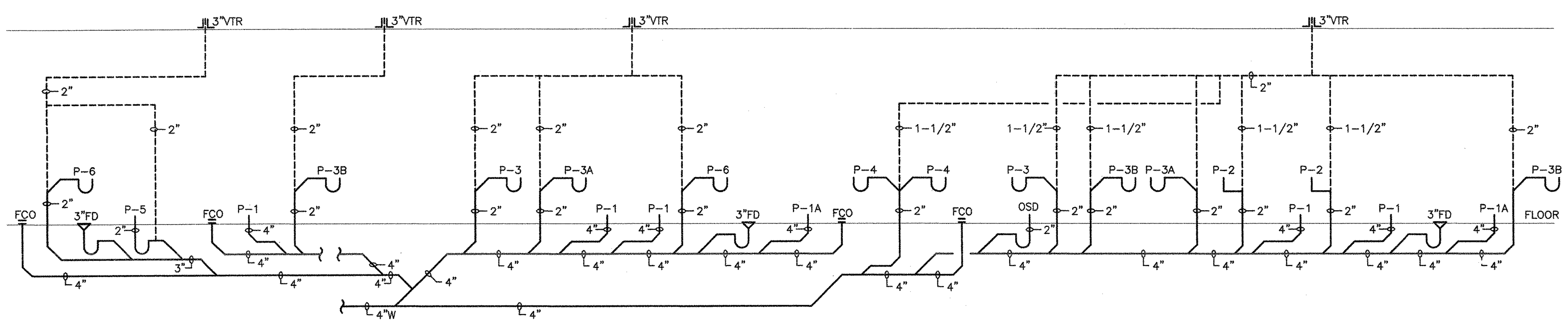

SANITARY/VENT FLOW DIAGRAM
NO SCALE

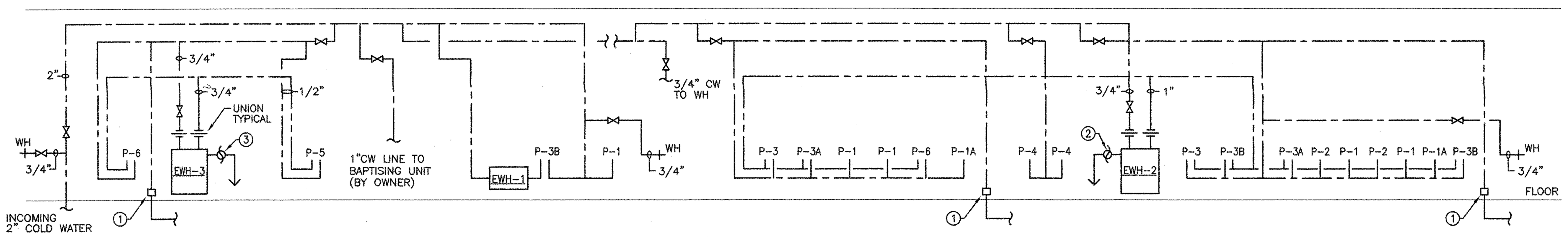

NOTE:
(1) TRAP PRIMER UNDERCOUNTER AND 1/2" TP LINE TO 3"FD.
(2) P & T VALVE. PIPE DISCHARGE TO P-5 SERVICE SINK.
(3) P & T VALVE. PIPE DISCHARGE TO O.S.D.

DOMESTIC WATER FLOW DIAGRAM
NO SCALE

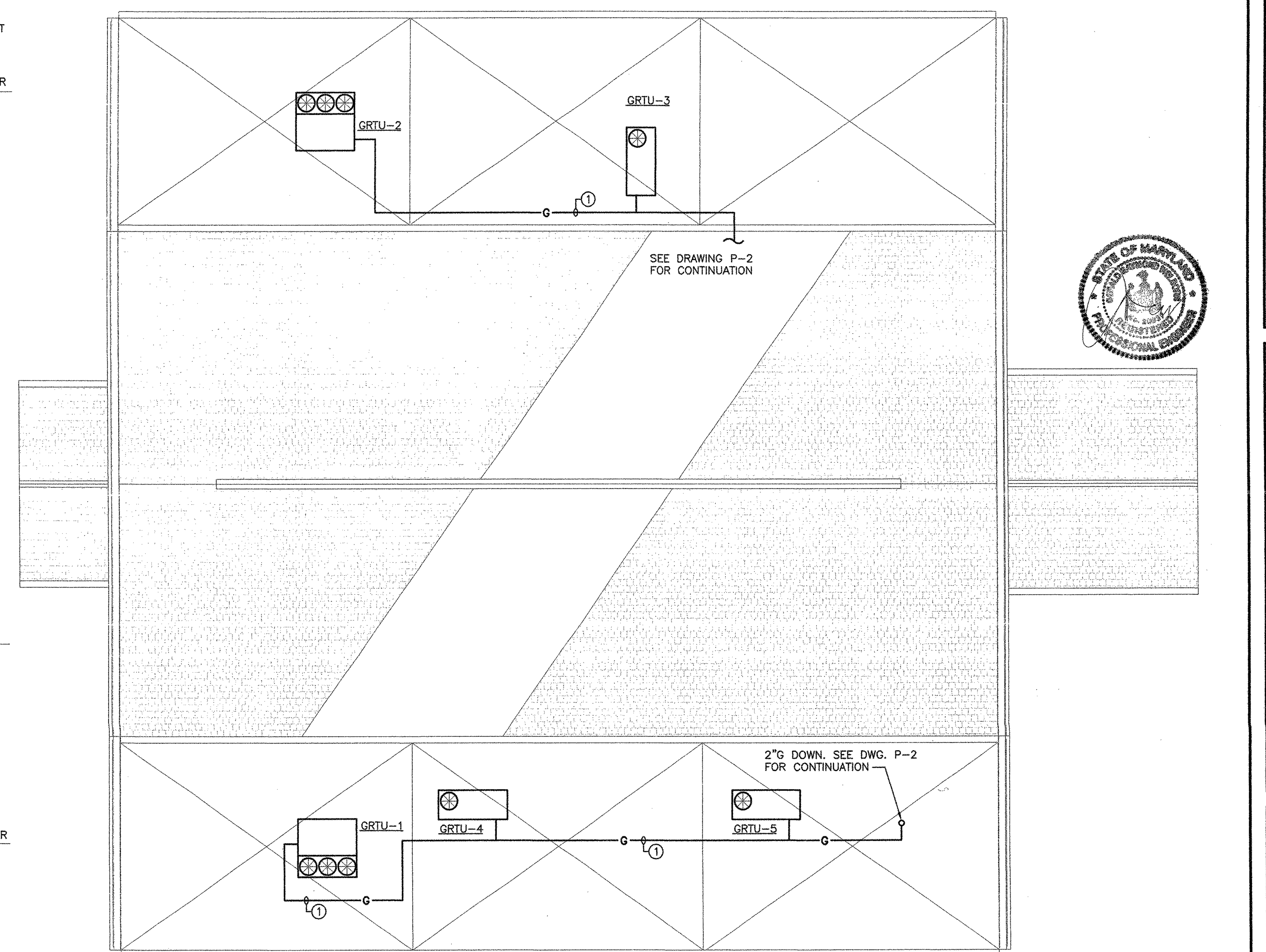

NOTE:
(1) EXPOSED GAS LINE ON ROOF. MOUNT ON PRESSURE TREATED WOOD BLOCKING.

ROOF PLAN - PLUMBING
SCALE:1/8"=1'-0"

Date:

Revisions:

Consultants:

ENGINEERS, INC.
1984 Chain Bridge Road Suite 200
McLean, VA 22102
(703) 847-0180 Fax (703) 847-0182

PROFESSIONAL CERTIFICATION: I CERTIFY THAT THESE DOCUMENTS WERE PREPARED OR APPROVED BY ME, AND THAT I AM A DULY LICENSED PROFESSIONAL ENGINEER UNDER THE LAWS OF THE STATE OF MARYLAND, LICENSE NO. 20837, EXPIRATION DATE MAY 18, 2011

Certification:

Project Title:

MIRACLE TEMPLE ASSEMBLY OF GOD
14111 ALDERTON ROAD
SILVER SPRING, MARYLAND 20906

NOTES, SCHEDULES, DETAILS & RISER DIAGRAMS

Philip Aaron Lacy, Architect
6188 Oxon Hill Road, Suite 303
Oxon Hill, Maryland 20745
Phone: 301-567-8223

Date:	OCTOBER 12, 2010
Scale:	NONE
Drawn:	CC
Checked:	BK
File No.	F:\PROJ\2010\10003

Drawing No.

P-1

of

Copyright 2005 Philip Aaron Lacy, Architect All rights reserved. No portion of this document may be reproduced without written permission.